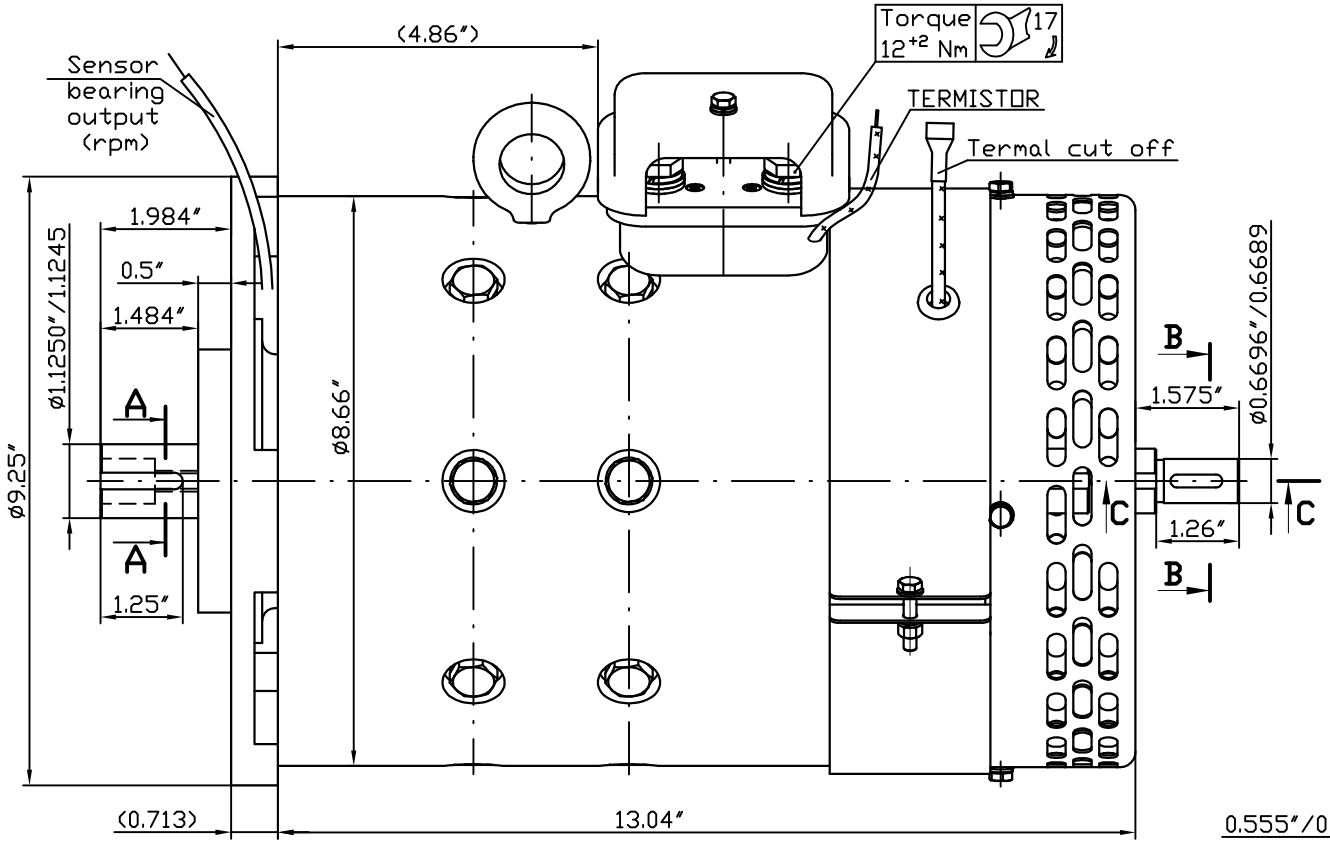

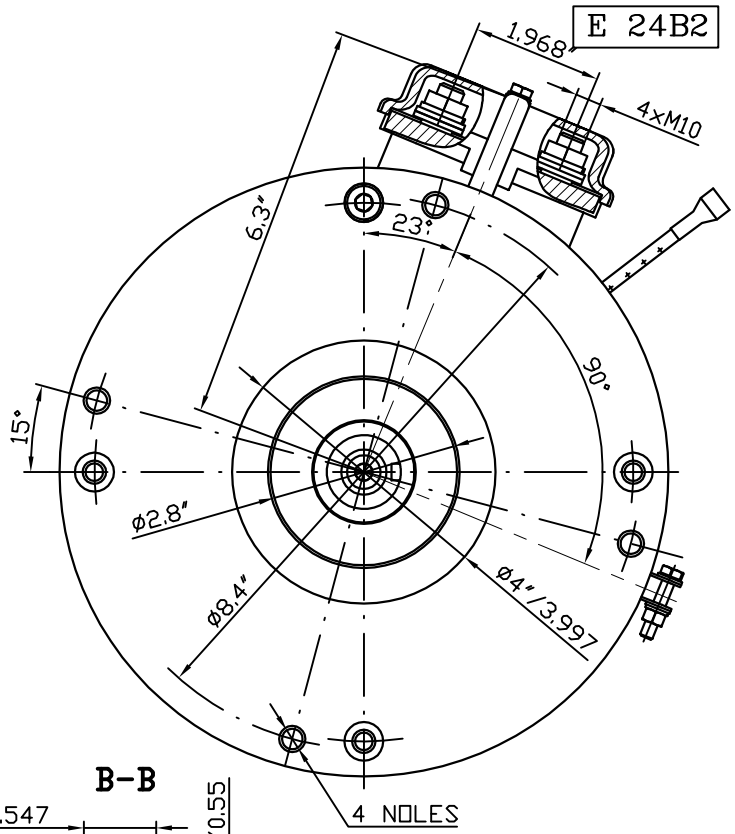

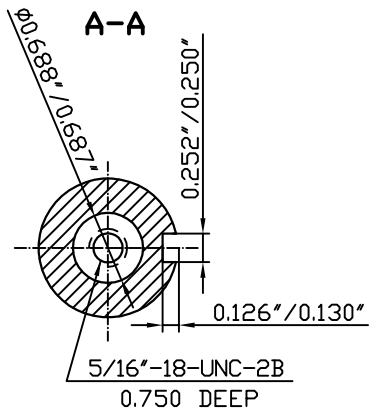

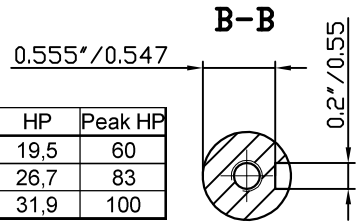

KOSTOV 9" 144V 17R-31750

rated power	24 kW
rated voltage	144 V
rated current	205 A
rated speed	5700 min^{-1}
operation mode	S2-60min
excitation	series
protection	IP 21
insulation	H
Interpoles:	YES
weight	43 kg
length L	
char. curve	S144E03
rotation	REV

Duty cycle	Volts	Amps	RPM	kW	HP	Peak HP
S2-60min	90	195	3550	14,9	19,5	60
S2-60min	115	205	4600	20,0	26,7	83
S2-60min	139	205	5700	23,9	31,9	100

KOSTOV MOTORS
KOSTOV 9" 144 V
excit. SERIES
IP 21 insulation H
kW 24 A 205 V 144 duty S2-60 min
rpm 5700 kg 43 S.N:
www.kostov - motors.com

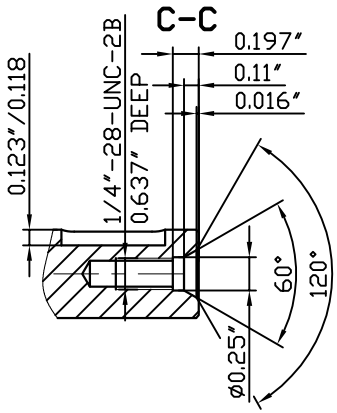

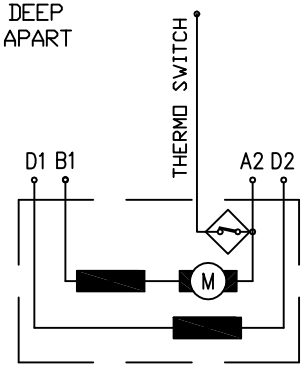

Rotation (viewed from drive end)
CCW: Connect D2 to A2; " + " to D1 and " - " to B1
CW: Connect D1 to A2; " + " to D2 and " - " to B1

Coating: black

Elprom-EMS

08.04.2009	
27.03.2009	
25.11.2008	
Rev.	